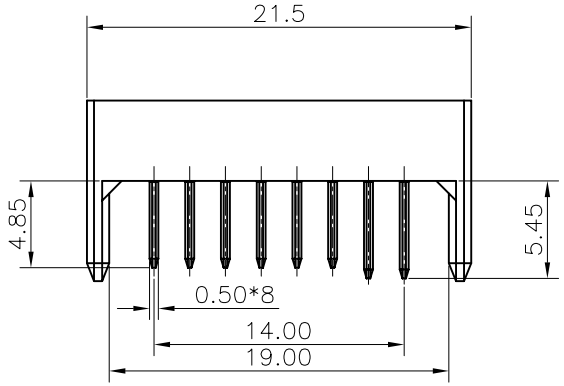

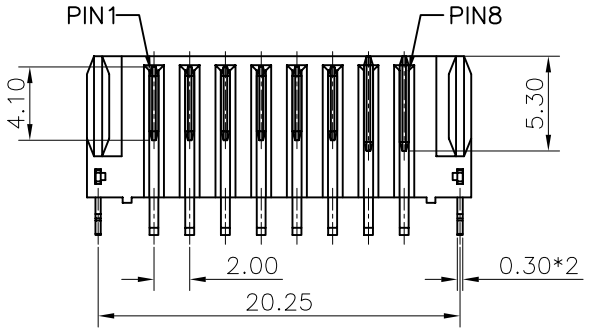

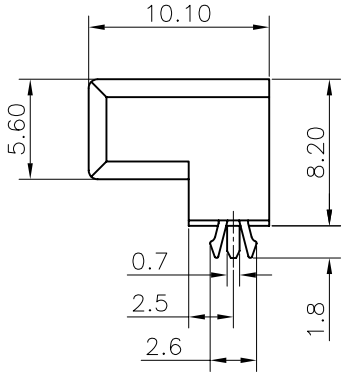

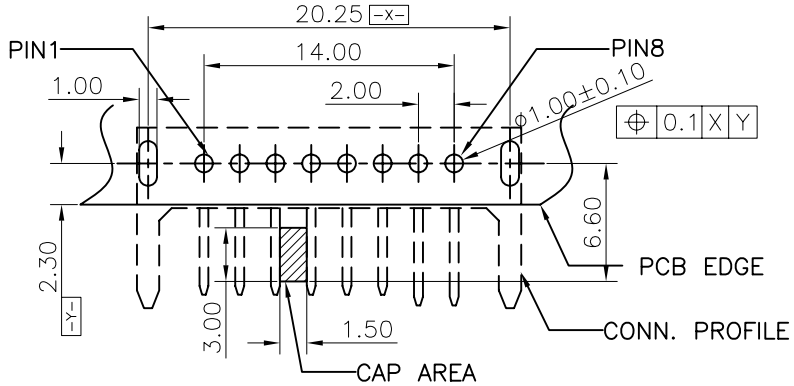

RECOMMENDED PCB LAYOUT
GENERAL TOLERANCE ±0.05

NOTES:
1. MATERIAL:
  1.1 HOUSING: THERMOPLASTIC, HIGH TEMP., UL94V-0; COLOR:BLACK.
  1.2 CONTACT: COPPER ALLOY
  2. FINISH:
  2.1 CONTACT:
    8:GOLD PLATING(10u") ON CONTACT AREA, AND 1u" GOLD PALTING ON SOLDER TAIL AREA, 50~100u" NICKEL UNDERPLATING OVERALL.
3. REFLOW SOLDER CAPABLE TO 260°C PER ACES SPEC.
4. WAVE SOLDER CAPABLE TO 260°C PER ACES SPEC.
5. SPEC. PLS. REFER TO PS-50975-xxxxx
6. PACKAGE PLS. REFER TO 51974-xxxxx-TRP

7. PART NUMBER

P/N LEGEND

51974-008 X X -XXX

- 008: NO OF CKT
- X: PACKING — 7:TAPE & REEL WITH COVER
- X: PLATING — 8: 10u" GOLD PLATING ON CONTACT AREA
- XXX: COLOR OF HOUSING — 001: BLACK

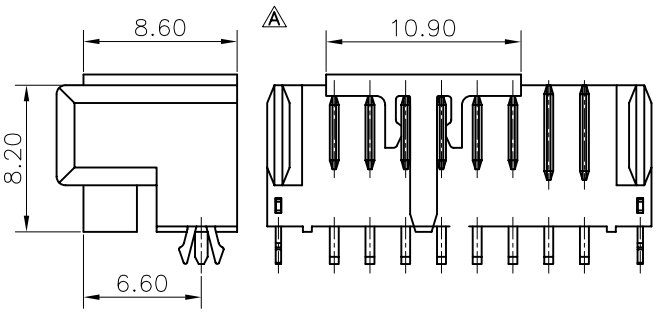

WITH COVER

一般公差 TOLERANCES X. ±0.50 .XX ±0.15 .X ±0.25 .XXX ±0.10 ANGLES ±2°	宏致電子股份有限公司 Aces Electronic Co.,Ltd.		
檢驗尺寸標示 SYMBOLS CR MA INDICATE CLASSIFICATION DIMENSION; CR MARK IS CRITICAL DIM.; MA MARK IS MAJOR DIM.	品名 (TITLE) 2.00mm Battery Conn. Male DIP R/A Type H=8.20	製圖 (DR) '09/12/07	Brave
		審核 (CHKD)	Sam
	圖號 (DWG.NO) 51974-xxxxx-xxx-aces	核准 (APPD)	Jason
表面處理 (FINISH)	比例 (SCALE) 2:1 / 單位 (UNITS) mm	張數 (SHEET) 1 OF 1	SIZE A4 / REV A